Rummel,
Klepper
& Kahl, LLP

William K. Hellmann
Emeritus

David W. Wallace
Robert J. Halbert
Stephen G. Zentz
J. Michael Potter
Thomas E. Mohler
James A. Zito

Charles M. Easter, Jr.
Joseph A. Romanowski, Jr.
Michael L. Krupsaw
Lars E. Hill
J. Tommy Peacock, Jr.
Michael W. Myers
Martin C. Rodgers
Kenneth A. Goon
Richard J. Adams, Jr.
John A. d'Epagnier
Barbara J. Hoage
Christopher F. Wright
Owen L. Peery
Nancy R. Bergeron
Stuart A. Montgomery
David G. Vanscoy
Henry J. Bankard, Jr.
James F. Ridenour, Jr.
Robert J. Andryszak
Raymond M. Harbeson, Jr.
B. Keith Skinner
Karen B. Kahl
Seyed A. Saadat
John C. Moore
Eric M. Klein
Todd E. Rousenberger
Donald P. Lauzon
Thomas M. Heil
Robert D. Ostermiller
Barry L. Brandt
Malachi Mills

3512 Concord Road
York, PA 17402
Ph: 717-600-2220
Fax: 717-600-2421
www.rkk.com

January 23, 2008

City of Baltimore
Abel Wolman Municipal Building
Department of Public Works
200 N. Holliday Street, Rm 204
Baltimore, MD 21202

ATTN: Mr. Joe Kostow

RE: Swann Park Renovation
Stormwater Management Letter of Explanation
RK&K Comm. No. 107076-01

Mr. Kostow:

On behalf of our Client, Baltimore City Department of Recreation and Parks (DRP), we hereby submit the Swann Park Renovation project for stormwater management review and approval. Our submission is comprised of the following:

1. Letter of Explanation, (2) copies.
2. Stormwater Management Plans (2 sheets), (2) copies.
3. Stormwater Management Calculations, bound, (2) copies.

Swann Park is located in the shadow of I-95, at the end of West McComas Street. The 10.86 acre property is currently closed off to the public due to discovery of arsenic contamination. Prior to shut-down, the park provided various ball-fields for general public and City-School use. Through the combined efforts of Honeywell (former property owner) and DRP, and under mandates from MDE, the park will be cleaned up and rebuilt. Honeywell will provide arsenic remediation in the form of a soil cap. DRP will provide recreational improvements, including softball, baseball and football fields, walking paths, restroom facilities and associated amenities.

Under separate cover, Honeywell and their engineering consultant, are responsible for obtaining from the City various project approvals including, but not limited to, Erosion and Sediment Control approval, a Floodplain Variance, and approval of a re-built storm drain system.

As before-mentioned, this submission is solely for stormwater management review and approval. As substantiated by the attached plans and calculations, Baltimore City Stormwater Management Regulations shall be met as follows:

<u>On-site SWM Quality Control:</u>
The proposed project is classified as “redevelopment”. As such, 1.01 acres of the post-construction 1.11 impervious acres is subject to water quality requirements. Two (2) swales have been designed to meet grass channel credit requirements and will provide the quality control for 0.74 acres (74%) of impervious.

<u>Off-site SWM Mitigation:</u>
Approval of offsite mitigation for the remaining 0.27 acres (26%) of impervious requiring water quality control is requested. DRP proposes to remove 0.27 acres of existing pavement at a to-be-determined off-site location. On-site management of the remaining 0.27 acres is not feasible. Adequate clearance from the contaminated and capped soil can not be obtained without raising the site higher than currently proposed. Raising the site higher than currently proposed would prohibit the ability to provide proper geometry for the ball fields. Even if grade were not an issue, the minimal remaining open space is needed for recreational purposes.

Rummel, Klepper & Kahl, LLP

Waiver of Groundwater Recharge:
A waiver of groundwater recharge requirements is requested. It is not desirable to recharge groundwater supplies by running stormwater through contaminated soil.

Waiver of SWM Quantity Control:
A waiver of the stormwater management quantity control requirements for this project is requested pursuant to Subtitle 23-1(1) of the Baltimore City Stormwater Management Ordinance. The Subtitle exempts quantity control requirements when the site directly discharges to tidal waters; as is true for the Swann Park site.

Please provide approval of the on-site stormwater management quality control measures, approval of the off-site SWM mitigation proposal, a waiver of Groundwater Recharge requirements, and a Waiver of SWM Quantity Control requirements. If you have any questions concerning the above, please do not hesitate to contact me.

Sincerely,

Rummel, Klepper & Kahl, LLP

Robert A. Filippi

Robert A. Filippi, RLA
Senior Landscape Architect

cc. Gennady Schwartz, Baltimore City DRP

X:\projects\2007\07076_BCDRP\task01-swann\Site\SWM\Letter of Explanation.doc

STORMWATER MANAGEMENT CALCULATIONS

Swann Park Renovation

201 West McComas St.
Baltimore, MD 21230

January 23, 2008

Prepared For:
Baltimore City Dep. of Recreation and Parks
2600 Madison Ave.
Baltimore, MD 21217
Attention of Gennady Schwartz

Prepared By:
Rummel, Klepper & Kahl, LLP
3512 Concord Rd.
York, PA 17404
Phone: (717) 600 - 2220

Water Quality Summary Sheet

WATER QUALITY SUMMARY SHEET

APPLICANT: Baltimore City Dept. of Recreation and Parks
DESCRIPTION: Swann Park

DATE: 01/23/08
AREA UNITS: acres
PREPARED BY: RK&K

	WATER QUALITY REQUIRED					WATER QUALITY PROVIDED			SUMMARY
A	B	C	D	E	F	G	H	I	J
		REDEVELOPMENT							
DRAINAGE AREA NUMBER	NEW DEVELOPMENT (ACRES or SF)	RE- CONSTRUCTED IMPERVIOUS AREA (ACRES or SF)	EXISTING IMPERVIOUS AREA REMOVED (ACRES or SF)	LOSS OF EXISTING WATER QUALITY (ACRES or SF)	IMPERVIOUS AREA REQUIRING TREATMENT B + 0.2C - 0.8D + E (ACRES or SF)	TREATMENT PRACTICE	IMPERVIOUS AREA TREATED BY NON-STRUCTURAL PRACTICE (ACRES or SF)	IMPERVIOUS AREA TREATED BY STRUCTURAL BMP (ACRES or SF)	WATER QUALITY DEFICIT/ EXCESS H + I - F (ACRES or SF)
A1-A2	0.39	0.05			0.40	Grass Channel Credit	0.40		0.00
B1-B3	0.34				0.34	Grass Channel Credit	0.34		0.00
C		0.04			0.01				-0.01
D-O	0.23	0.01	0.02		0.22				-0.22
P	0.05		0.01		0.04				-0.04
TOTAL (Σ)	1.01	0.10	0.03	0.00	1.01	0.00	0.74	0.00	-0.27

Grass Channel Credit Calculations

Swale A
(Drainage Areas A1-A2)

Rummel, Klepper & Kahl, LLP
3512 Concord Rd
York, PA 17402
Phone: (717) 600-2220
Fax: (717) 600-2421
www.rkk.com

Job No.: 107076-01

GRASS CHANNEL CREDIT

Project: Swann Park
Location: Baltimore, MD
Study Point: **Swale A**
Drainage Areas A1-A2

	By	Date
Computed	raf	01/23/08
Checked		

1. Compute Runoff Coefficient (Rv)

Drainage Area (A) =	3.48	acres
Percent Impervious (I) =	13%	
Runoff Coefficient (Rv) =	0.167	
Rainfall Depth (P) =	1.0	inch
Water Quality Volume (WQv) =	0.0484	acre-feet
	2108	cubic feet

Cover	Area	
Impervious	0.44	acres
Grass	3.04	acres
Total	3.48	acres

Rv = 0.05 + 0.009(I)
WQv = [(A)(Rv)(P)]/12

2. Compute Curve Number for 1" Storm (Small Storm Hydrology Method, Appendix D.10 of SWM Manual)

P =	1.0	inch	
Rv =	0.167		Rv = 0.05 + 0.009(I)
Qa =	0.167	watershed inches	Qa=P x Rv
Therefore CN =	85		CN =1000/ [10 + 5P + 10Qa - 10(Qa^2 + 1.25QaP)$^{1/2}$]

3. Compute Time of Concentration (Tc) for 1" Storm (Using TR-55)

a. Compute Max. Swale Velocity (using max. swale depth)

Mannings Coefficient (n)=	0.035		
Max. Depth =	1.5	ft	
Bottom Width =	4	ft	
Side Slope =	3 to 1		
Longitudinal Slope =	1.1	%	
Velocity =	4.29	fps	See Flowmaster Worksheet "Trial Swale A"

b. Compute Full Flow Velocity of Culvert

Pipe Type =	circular cmp		
Mannings Coefficient =	0.024		
Pipe Size =	18	in.	
Velocity =	3.38	fps	See Flowmaster Worksheet "Culvert A - Full Flow"

c. Compute Time of Concentration (Tc)

Tc =	0.270	mins	See WinTr55 Worksheet "Grass Channel Credit - 1 in Storm"

Rummel, Klepper & Kahl, LLP
3512 Concord Rd
York, PA 17402
Phone: (717) 600-2220
Fax: (717) 600-2421
www.rkk.com

Job No.: 107076-01

GRASS CHANNEL CREDIT

Project: Swann Park
Location: Baltimore, MD
Study Point: **Swale A**
Drainage Areas A1-A2

	By	Date
Computed	raf	01/23/08
Checked		

4. Compute Peak Discharge for 1" Storm (Using TR-55 Graphical Peak Discharge)

Curve Number (CN) =	85		
Drainage area (A) =	3.48	acres	
Time of Conc. (Tc) =	0.270	mins	
Therefore Peak Discharge (Qp) =	0.58	cfs	See WinTr55 Worksheet "Grass Channel Credit - 1 in Storm"

5. Compute Actual Swale Velocity for 1" Storm

Peak Discharge (Qp) =	0.58	cfs	
Mannings Coefficient (n)=	0.15		Mannings (n) solved by trial and error w/ depth (d) in inches
Bottom Width =	4	ft	for d<=4" n=0.15
Side Slope =	3 to 1		for 4"<d<12" n=0.207-0.0145 x d
Longitudinal Slope =	1.1	%	
Therefore for 1" Storm:			
Actual Depth (d) =	0.29	ft	See Flowmaster Worksheet "Actual Swale A - 1 in"
Actual Velocity =	0.41	fps	See Flowmaster Worksheet "Actual Swale A - 1 in"

6. Compute Time of Concentration for 10 yr Storm (Using TR-55)

a. Compute Max. Swale Velocity (using max. swale depth)
Velocity = 4.29 fps — See calculation 3.a above

b. Compute Full Flow Velocity of Culvert
Velocity = 3.38 — See calculation 3.b above

c. Compute Time of Concentration (Tc)
Tc = 0.270 mins — See WinTr55 Worksheet "Grass Channel Credit - 10 Yr Storm"

Rummel, Klepper & Kahl, LLP
3512 Concord Rd
York, PA 17402
Phone: (717) 600-2220
Fax: (717) 600-2421
www.rkk.com

Job No.: 107076-01

GRASS CHANNEL CREDIT

Project: Swann Park
Location: Baltimore, MD
Study Point: **Swale A**
Drainage Areas A1-A2

	By	Date
Computed	raf	01/23/08
Checked		

7. Compute Peak Discharge for 10 yr Storm (Using TR-55 Graphical Peak Discharge)

Curve Number (CN) =	77		
Drainage area (A) =	3.48	acres	
Time of Conc. (Tc) =	0.270	mins	
Therefore Peak Discharge (Qp) =	11.36	cfs	See WinTr55 Worksheet "Grass Channel Credit - 10 Yr Storm"

8. Compute Velocity for 10 yr Storm

Peak Discharge (Qp) =	11.36	cfs	
Mannings Coefficient (n)=	0.035		
Bottom Width =	4	ft	
Side Slope =	3 to 1		
Longitudinal Slope =	1.1	%	
Therefore for 10 Yr. Storm:			
Actual Flow Depth (d) =	0.68	ft	See Flowmaster Worksheet "Actual Swale A - 10 yr"
Available Swale Depth =	1.00	ft	Depth of swale at most shallow point
Freeboard =	3.8	in	Min. required by SWM Manual, Sect. 3.5.2, is 3"
Actual Velocity =	2.78	fps	See Flowmaster Worksheet "Actual Swale A - 10 yr"

K:\projects\2007\07076_BCDRP\task01-swann\Site\SWM\Swale A\Grass Channel Credit - A.xls

Trial Swale A
Worksheet for Trapezoidal Channel

Project Description	
Worksheet	Trial Swale A
Flow Element	Trapezoidal Cha
Method	Manning's Form
Solve For	Discharge

Input Data		
Mannings Coeffic	).035	
Channel Slope	).011	ft/ft
Depth	1.50	ft
Left Side Slope	3.00	H : V
Right Side Slope	3.00	H : V
Bottom Width	4.00	ft

Results		
Discharge	54.68	cfs
Flow Area	12.8	ft²
Wetted Perim	13.49	ft
Top Width	13.00	ft
Critical Depth	1.30	ft
Critical Slope	0.020	ft/ft
Velocity	4.29	ft/s
Velocity Head	0.29	ft
Specific Energ	1.79	ft
Froude Numb	0.76	
Flow Type	Subcritical	

Culvert A - Full Flow
Worksheet for Circular Channel

Project Description	
Worksheet	Culvert A - Full Flc
Flow Element	Circular Channel
Method	Manning's Formul
Solve For	Full Flow Capacity

Input Data		
Mannings Coeffic	).024	
Channel Slope	).011	ft/ft
Diameter	18.0	in

Results		
Depth	1.50	ft
Discharge	5.97	cfs
Flow Area	1.8	ft²
Wetted Perime	4.71	ft
Top Width	0.00	ft
Critical Depth	0.94	ft
Percent Full	100.0	%
Critical Slope	).021	ft/ft
Velocity	3.38	ft/s
Velocity Head	0.18	ft
Specific Energy	1.68	ft
Froude Numbe	0.00	
Maximum Disc	6.42	cfs
Discharge Full	5.97	cfs
Slope Full	).011	ft/ft
Flow Type	N/A	

WinTR-55 Current Data Description

--- Identification Data ---

User: raf
Project: Swann Park
SubTitle: Grass Channel Credit - 1 in Storm
State: Maryland
County: Baltimore
Filename: X:\projects\2007\07076_BCDRP\task01-swann\Site\SWM\Swale A\TR55 - Grass Channel A - 1 in strm.w5

Date: 1/21/2008
Units: English
Areal Units: Acres

--- Sub-Area Data ---

Name	Description	Reach	Area(ac)	RCN	Tc
Swale A	Beginning to Bay	Outlet	3.48	85	0.270

Total area: 3.48 (ac)

--- Storm Data --

Rainfall Depth by Rainfall Return Period

2-Yr (in)	5-Yr (in)	10-Yr (in)	25-Yr (in)	50-Yr (in)	100-Yr (in)	1-Yr (in)
3.2	4.2	5.1	5.5	6.3	7.1	1.0

Storm Data Source: User-provided custom storm data
Rainfall Distribution Type: Type II
Dimensionless Unit Hydrograph: <standard>

raf

Swann Park
Grass Channel Credit - 1 in Storm
Baltimore County, Maryland

Watershed Peak Table

Sub-Area or Reach Identifier	Peak Flow by Rainfall Return Period 1-Yr (cfs)
SUBAREAS	
Swale A	0.58
REACHES	
OUTLET	0.58

raf

Swann Park
Grass Channel Credit - 1 in Storm
Baltimore County, Maryland

Sub-Area Time of Concentration Details

Sub-Area Identifier/	Flow Length (ft)	Slope (ft/ft)	Mannings's n	End Area (sq ft)	Wetted Perimeter (ft)	Velocity (ft/sec)	Travel Time (hr)
Swale A							
SHEET	100	0.0150	0.150				0.183
SHALLOW	160	0.0100	0.050				0.028
CHANNEL	870					4.290	0.056
CHANNEL	40					3.380	0.003
					Time of Concentration		0.270

raf

Swann Park
Grass Channel Credit - 1 in Storm
Baltimore County, Maryland

Sub-Area Land Use and Curve Number Details

Sub-Area Identifier	Land Use	Hydrologic Soil Group	Sub-Area Area (ac)	Curve Number
Swale A	CN directly entered by user	-	3.48	85
	Total Area / Weighted Curve Number		3.48	85
			====	==

Actual Swale A - 1 in
Worksheet for Trapezoidal Channel

Project Description	
Worksheet	Actual Swale A - 1
Flow Element	Trapezoidal Chan
Method	Manning's Formul
Solve For	Channel Depth

Input Data		
Mannings Coeffic	).150	
Channel Slope	).011	ft/ft
Left Side Slope	3.00	H : V
Right Side Slope	3.00	H : V
Bottom Width	4.00	ft
Discharge	0.58	cfs

Results		
Depth	0.29	ft
Flow Area	1.4	ft²
Wetted Perim	5.85	ft
Top Width	5.76	ft
Critical Depth	0.08	ft
Critical Slope	0.768	ft/ft
Velocity	0.41	ft/s
Velocity Head	0.00	ft
Specific Energ	0.30	ft
Froude Numb	0.14	
Flow Type	Subcritical	

WinTR-55 Current Data Description

--- Identification Data ---

User: raf
Project: Swann Park
SubTitle: Grass Channel Credit - 10 yr Storm
State: Maryland
County: Baltimore
Filename: X:\projects\2007\07076_BCDRP\task01-swann\Site\SWM\Swale A\TR55 - Grass Channel B - 10 yr strm.w

Date: 1/21/2008
Units: English
Areal Units: Acres

--- Sub-Area Data ---

Name	Description	Reach	Area(ac)	RCN	Tc
Swale A	Beginning to Bay	Outlet	3.48	77	0.270

Total area: 3.48 (ac)

--- Storm Data --

Rainfall Depth by Rainfall Return Period

2-Yr (in)	5-Yr (in)	10-Yr (in)	25-Yr (in)	50-Yr (in)	100-Yr (in)	1-Yr (in)
3.2	4.2	5.1	5.5	6.3	7.1	1.0

Storm Data Source: User-provided custom storm data
Rainfall Distribution Type: Type II
Dimensionless Unit Hydrograph: <standard>

raf

Swann Park
Grass Channel Credit - 10 yr Storm
Baltimore County, Maryland

Watershed Peak Table

Sub-Area or Reach Identifier	Peak Flow by Rainfall Return Period 10-Yr (cfs)
SUBAREAS	
Swale A	11.36
REACHES	
OUTLET	11.36

raf

Swann Park
Grass Channel Credit - 10 yr Storm
Baltimore County, Maryland

Sub-Area Time of Concentration Details

Sub-Area Identifier/	Flow Length (ft)	Slope (ft/ft)	Mannings's n	End Area (sq ft)	Wetted Perimeter (ft)	Velocity (ft/sec)	Travel Time (hr)
Swale A							
SHEET	100	0.0150	0.150				0.183
SHALLOW	160	0.0100	0.050				0.028
CHANNEL	870					4.290	0.056
CHANNEL	40					3.380	0.003
					Time of Concentration		0.270

raf

Swann Park
Grass Channel Credit - 10 yr Storm
Baltimore County, Maryland

Sub-Area Land Use and Curve Number Details

Sub-Area Identifier	Land Use	Hydrologic Soil Group	Sub-Area Area (ac)	Curve Number
Swale A	Open space; grass cover > 75% (good)	C	3.04	74
	Paved parking lots, roofs, driveways	C	.44	98
	Total Area / Weighted Curve Number		3.48	77
			====	==

Actual Swale A - 10 yr
Worksheet for Trapezoidal Channel

Project Description	
Worksheet	Actual Swale A - 1(
Flow Element	Trapezoidal Chann
Method	Manning's Formula
Solve For	Channel Depth

Input Data		
Mannings Coeffic	).035	
Channel Slope	).011	ft/ft
Left Side Slope	3.00	H : V
Right Side Slope	3.00	H : V
Bottom Width	4.00	ft
Discharge	L1.36	cfs

Results		
Depth	0.68	ft
Flow Area	4.1	ft²
Wetted Perim(	8.28	ft
Top Width	8.06	ft
Critical Depth	0.55	ft
Critical Slope	0.025	ft/ft
Velocity	2.78	ft/s
Velocity Head	0.12	ft
Specific Energ	0.80	ft
Froude Numb(	0.69	
Flow Type	Subcritical	

Grass Channel Credit Calculations

Swale B
(Drainage Areas B1-B3)

Rummel, Klepper & Kahl, LLP
3512 Concord Rd
York, PA 17402
Phone: (717) 600-2220
Fax: (717) 600-2421
www.rkk.com

Job No.: 107076-01

GRASS CHANNEL CREDIT

Project: Swann Park
Location: Baltimore, MD
Study Point: **Swale B**
Drainage Areas B1-B3

	By	Date
Computed	raf	01/23/08
Checked		

1. Compute Runoff Coefficient (Rv)

Drainage Area (A) =	2.61	acres
Percent Impervious (I) =	13%	
Runoff Coefficient (Rv) =	0.167	
Rainfall Depth (P) =	1.0	inch
Water Quality Volume (WQv) =	0.0363	acre-feet
	1581	cubic feet

Cover	Area	
Impervious	0.34	acres
Grass	2.27	acres
Total	2.61	acres

Rv = 0.05 + 0.009(I)
WQv = [(A)(Rv)(P)]/12

2. Compute Curve Number for 1" Storm (Small Storm Hydrology Method, Appendix D.10 of SWM Manual)

P =	1.0	inch	
Rv =	0.167		Rv = 0.05 + 0.009(I)
Qa =	0.167	watershed inches	Qa=P x Rv
Therefore CN =	85		CN =1000/ [10 + 5P + 10Qa - 10(Qa^2 + 1.25QaP)$^{1/2}$]

3. Compute Time of Concentration (Tc) for 1" Storm (Using TR-55)

a. Compute Max. Swale Velocity (using max. swale depth)

Mannings Coefficient (n)=	0.035	
Max. Depth =	1.5	ft
Bottom Width =	4	ft
Side Slope =	3 to 1	
Longitudinal Slope =	1.5	%
Velocity =	5.01	fps

See Flowmaster Worksheet "Trial Swale B"

b. Compute Full Flow Velocity of Culvert

Pipe Type =	circular cmp	
Mannings Coefficient =	0.024	
Pipe Size =	18	in.
Velocity =	4.20	fps

See Flowmaster Worksheet "Culvert B - Full Flow"

c. Compute Time of Concentration (Tc)

Tc = 0.250 mins

See WinTr55 Worksheet "Grass Channel Credit - 1 in Storm"

Rummel, Klepper & Kahl, LLP
3512 Concord Rd
York, PA 17402
Phone: (717) 600-2220
Fax: (717) 600-2421
www.rkk.com

Job No.: 107076-01

GRASS CHANNEL CREDIT

Project: Swann Park
Location: Baltimore, MD
Study Point: **Swale B**
Drainage Areas B1-B3

	By	Date
Computed	raf	01/23/08
Checked		

4. Compute Peak Discharge for 1" Storm (Using TR-55 Graphical Peak Discharge)

Curve Number (CN) =	85		
Drainage area (A) =	2.61	acres	
Time of Conc. (Tc) =	0.250	mins	
Therefore Peak Discharge (Qp) =	0.46	cfs	See WinTr55 Worksheet "Grass Channel Credit - 1 in Storm"

5. Compute Actual Swale Velocity for 1" Storm

Peak Discharge (Qp) =	0.46	cfs	
Mannings Coefficient (n)=	0.15		Mannings (n) solved by trial and error w/ depth (d) in inches
Bottom Width =	4	ft	for d<=4" n=0.15
Side Slope =	3 to 1		for 4"<d<12" n=0.207-0.0145 x d
Longitudinal Slope =	1.5	%	
Therefore for 1" Storm:			
Actual Depth (d) =	0.23	ft	See Flowmaster Worksheet "Actual Swale B - 1 in"
Actual Velocity(Vwq) =	0.42	fps	See Flowmaster Worksheet "Actual Swale B - 1 in"

6. Compute Time of Concentration for 10 yr Storm (Using TR-55)

a. Compute Max. Swale Velocity (using max. swale depth)
Velocity = 5.01 fps — See calculation 3.a above

b. Compute Full Flow Velocity of Culvert
Velocity = 4.20 — See calculation 3.b above

c. Compute Time of Concentration (Tc)
Tc = 0.250 mins — See WinTr55 Worksheet "Grass Channel Credit - 10 Yr Storm"

Rummel, Klepper & Kahl, LLP
3512 Concord Rd
York, PA 17402
Phone: (717) 600-2220
Fax: (717) 600-2421
www.rkk.com

Job No.: 107076-01

GRASS CHANNEL CREDIT

Project: Swann Park
Location: Baltimore, MD
Study Point: **Swale B**
Drainage Areas B1-B3

	By	Date
Computed	raf	01/23/08
Checked		

7. Compute Peak Discharge for 10 yr Storm (Using TR-55 Graphical Peak Discharge)

Curve Number (CN) = 77
Drainage area (A) = 2.61 acres
Time of Conc. (Tc) = 0.250 mins

Therefore Peak Discharge (Qp) = 8.78 cfs — See WinTr55 Worksheet "Grass Channel Credit - 10 Yr Storm"

8. Compute Velocity for 10 yr Storm

Peak Discharge (Qp) = 8.78 cfs
Mannings Coefficient (n)= 0.035
Bottom Width = 4 ft
Side Slope = 3 to 1
Longitudinal Slope = 1.5 %

Therefore for 10 Yr. Storm:
Actual Flow Depth (d) = 0.54 ft — See Flowmaster Worksheet "Actual Swale B - 10 yr"
Available Swale Depth = 1.50 ft — Minimum designed swale depth
Freeboard = 11.5 in — Min. required by SWM Manual, Sect. 3.5.2, is 3"
Actual Velocity = 2.87 fps — See Flowmaster Worksheet "Actual Swale B - 10 yr"

9. Compute Requirements for Piped Inflow

a. Compute Pretreatment Storage for Piped Inflow

Piped Impervious Area = 0.27 ac.
Pre-treatment Storage Req'd = 98.0 cf — 0.1 in. per impervious acre

Pretreatment Storage Volume Calculation by Contour Line Area:

Elevation (FT)	Area (SF)	Avg. Area (SF)	Elevation Interval (FT)	Volume (CF)	Cum. Volume (CF)
11.33	0				
12.00	429	215	0.67	144	144

Bottom of Dam Elevation = 11.33 ft
Prop. Weir Crest Elevation = 12.0 ft
Pre-treatment Storage Provided = 144.0 cf

Rummel, Klepper & Kahl, LLP
3512 Concord Rd
York, PA 17402
Phone: (717) 600-2220
Fax: (717) 600-2421
www.rkk.com

Job No.: 107076-01

GRASS CHANNEL CREDIT

Project: Swann Park
Location: Baltimore, MD
Study Point: **Swale B**
Drainage Areas B1-B3

	By	Date
Computed	raf	01/23/08
Checked		

b. Compute Broad-Crested Weir Coefficient

Slope of upstream weir face =	vertical	
Slope of downstream face =	vertical	
Length of weir normal to flow (Ln) =	0.67	ft
approximate head (h) =	0.80	ft
h/Ln ratio =	1.2	
Therefore Weir Coefficient (C) =	3.10	

See "Figure 7 Coefficients of discharge for full width, broad-crested weirs with downstream slope ≤ 1:1 and various upstream slopes" for interpolation of (C) . Approximate head (h) here first, then come back and revise with actual head (H). Repeat procedure until (h) nearly equals (H).

c. Compute Weir Opening for 10 Yr. Storm

10-Year Peak Discharge (Q) =	8.78	cfs	See calculation 7 above
Weir Coefficient (C) =	3.10		
Weir Length (L) =	4	ft	Equal to stream bottom width
therefore actual Head (H) =	0.79	ft	Weir Equation: $Q = CLH^{1.5}$
Height of Dam above weir crest =	1.25	ft	
Available Freeboard =	5.5	in.	Min. freeboard req'd = 3"
Flow Area =	3.16	sf	for rectangular channel
10-Year Velocity =	2.78	fps	
Weir Crest Elevation =	12.00	ft	
10-Year Water Surface Elevation =	12.79	ft	
Top of Dam Elevation =	13.25	ft	

d. Compute Min. Swale Length for 9 minute Residence Time

Design Flow Velocity (Vwq) =	0.42	fps	Use Actual Velocity from 1" Storm, Calculation 5 above.
Min. Channel Length Req'd (L) =	227	ft	L=540 x Vwq
Length Provided =	536	ft	

K:\projects\2007\07076_BCDRP\task01-swann\Site\SWM\Swale B\Grass Channel Credit - B.xls

Trial Swale B
Worksheet for Trapezoidal Channel

Project Description	
Worksheet	Trial Swale B
Flow Element	Trapezoidal Cha
Method	Manning's Form
Solve For	Discharge

Input Data		
Mannings Coeffic	).035	
Channel Slope	).015	ft/ft
Depth	1.50	ft
Left Side Slope	3.00	H : V
Right Side Slope	3.00	H : V
Bottom Width	4.00	ft

Results		
Discharge	63.86	cfs
Flow Area	12.8	ft²
Wetted Perim	13.49	ft
Top Width	13.00	ft
Critical Depth	1.41	ft
Critical Slope	0.019	ft/ft
Velocity	5.01	ft/s
Velocity Head	0.39	ft
Specific Energ	1.89	ft
Froude Numb	0.89	
Flow Type	Subcritical	

Culvert B - Full Flow
Worksheet for Circular Channel

Project Description	
Worksheet	Culvert B - Full Flo
Flow Element	Circular Channel
Method	Manning's Formul
Solve For	Full Flow Capacity

Input Data		
Mannings Coeffic	).024	
Channel Slope	).017	ft/ft
Diameter	18.0	in

Results		
Depth	1.50	ft
Discharge	7.42	cfs
Flow Area	1.8	ft²
Wetted Perime	4.71	ft
Top Width	0.00	ft
Critical Depth	1.06	ft
Percent Full	100.0	%
Critical Slope	).024	ft/ft
Velocity	4.20	ft/s
Velocity Head	0.27	ft
Specific Energy	1.77	ft
Froude Numbe	0.00	
Maximum Disc	7.98	cfs
Discharge Full	7.42	cfs
Slope Full	).017	ft/ft
Flow Type	N/A	

WinTR-55 Current Data Description

--- Identification Data ---

User: raf
Project: Swann Park
SubTitle: Grass Channel Credit - 1 in Storm
State: Maryland
County: Baltimore
Filename: X:\projects\2007\07076_BCDRP\task01-swann\Site\SWM\Swale B\TR55 - Grass Channel B - 1 in strm.w5

Date: 1/21/2008
Units: English
Areal Units: Acres

--- Sub-Area Data ---

Name	Description	Reach	Area(ac)	RCN	Tc
Swale B	Beginning to Bay	Outlet	2.61	85	0.250

Total area: 2.61 (ac)

--- Storm Data --

Rainfall Depth by Rainfall Return Period

2-Yr (in)	5-Yr (in)	10-Yr (in)	25-Yr (in)	50-Yr (in)	100-Yr (in)	1-Yr (in)
3.2	4.2	5.1	5.5	6.3	7.1	1.0

Storm Data Source: User-provided custom storm data
Rainfall Distribution Type: Type II
Dimensionless Unit Hydrograph: <standard>

raf

Swann Park
Grass Channel Credit - 1 in Storm
Baltimore County, Maryland

Watershed Peak Table

Sub-Area or Reach Identifier	Peak Flow by Rainfall Return Period 1-Yr (cfs)
SUBAREAS	
Swale B	0.46
REACHES	
OUTLET	0.46

raf

Swann Park
Grass Channel Credit - 1 in Storm
Baltimore County, Maryland

Sub-Area Time of Concentration Details

Sub-Area Identifier/	Flow Length (ft)	Slope (ft/ft)	Mannings's n	End Area (sq ft)	Wetted Perimeter (ft)	Velocity (ft/sec)	Travel Time (hr)
Swale B							
SHEET	100	0.0140	0.150				0.188
SHALLOW	165	0.0150	0.050				0.023
SHALLOW	40	0.0350	0.050				0.004
CHANNEL	40					4.200	0.003
CHANNEL	585					5.010	0.032
					Time of Concentration		0.250

raf

Swann Park
Grass Channel Credit - 1 in Storm
Baltimore County, Maryland

Sub-Area Land Use and Curve Number Details

Sub-Area Identifier	Land Use	Hydrologic Soil Group	Sub-Area Area (ac)	Curve Number
Swale B	CN directly entered by user	-	2.61	85
	Total Area / Weighted Curve Number		2.61	85
			====	==

Actual Swale B - 1 in
Worksheet for Trapezoidal Channel

Project Description	
Worksheet	Actual Swale B - 1
Flow Element	Trapezoidal Chan
Method	Manning's Formul
Solve For	Channel Depth

Input Data		
Mannings Coeffic	).150	
Channel Slope	).015	ft/ft
Left Side Slope	3.00	H : V
Right Side Slope	3.00	H : V
Bottom Width	4.00	ft
Discharge	0.46	cfs

Results		
Depth	0.23	ft
Flow Area	1.1	ft²
Wetted Perim	5.48	ft
Top Width	5.41	ft
Critical Depth	0.07	ft
Critical Slope	0.804	ft/ft
Velocity	0.42	ft/s
Velocity Head	0.00	ft
Specific Energ	0.24	ft
Froude Numb	0.16	
Flow Type	Subcritical	

WinTR-55 Current Data Description

--- Identification Data ---

User: raf
Project: Swann Park
SubTitle: Grass Channel Credit - 10 Yr Storm
State: Maryland
County: Baltimore
Filename: X:\projects\2007\07076_BCDRP\task01-swann\Site\SWM\Swale B\TR55 - Grass Channel B - 10 yr strm.w

Date: 1/21/2008
Units: English
Areal Units: Acres

--- Sub-Area Data ---

Name	Description	Reach	Area(ac)	RCN	Tc
Swale B	Beginning to Bay	Outlet	2.61	77	0.250

Total area: 2.61 (ac)

--- Storm Data --

Rainfall Depth by Rainfall Return Period

2-Yr (in)	5-Yr (in)	10-Yr (in)	25-Yr (in)	50-Yr (in)	100-Yr (in)	1-Yr (in)
3.2	4.2	5.1	5.5	6.3	7.1	1.0

Storm Data Source: User-provided custom storm data
Rainfall Distribution Type: Type II
Dimensionless Unit Hydrograph: <standard>

raf

Swann Park
Grass Channel Credit - 10 Yr Storm
Baltimore County, Maryland

Watershed Peak Table

Sub-Area or Reach Identifier	Peak Flow by Rainfall Return Period 10-Yr (cfs)
SUBAREAS	
Swale B	8.78
REACHES	
OUTLET	8.78

raf

Swann Park
Grass Channel Credit - 10 Yr Storm
Baltimore County, Maryland

Sub-Area Time of Concentration Details

Sub-Area Identifier/	Flow Length (ft)	Slope (ft/ft)	Mannings's n	End Area (sq ft)	Wetted Perimeter (ft)	Velocity (ft/sec)	Travel Time (hr)
Swale B							
SHEET	100	0.0140	0.150				0.188
SHALLOW	165	0.0150	0.050				0.023
SHALLOW	40	0.0350	0.050				0.004
CHANNEL	40					4.200	0.003
CHANNEL	585					5.010	0.032
					Time of Concentration		0.250

raf

Swann Park
Grass Channel Credit - 10 Yr Storm
Baltimore County, Maryland

Sub-Area Land Use and Curve Number Details

Sub-Area Identifier	Land Use	Hydrologic Soil Group	Sub-Area Area (ac)	Curve Number
Swale B	Open space; grass cover > 75% (good)	C	2.27	74
	Paved parking lots, roofs, driveways	C	.34	98
	Total Area / Weighted Curve Number		2.61	77
			====	==

Actual Swale B - 10 yr
Worksheet for Trapezoidal Channel

Project Description	
Worksheet	Actual Swale B - 1(
Flow Element	Trapezoidal Chann
Method	Manning's Formula
Solve For	Channel Depth

Input Data		
Mannings Coeffic	).035	
Channel Slope	).015	ft/ft
Left Side Slope	3.00	H : V
Right Side Slope	3.00	H : V
Bottom Width	4.00	ft
Discharge	8.78	cfs

Results		
Depth	0.54	ft
Flow Area	3.1	ft²
Wetted Perim	7.43	ft
Top Width	7.26	ft
Critical Depth	0.47	ft
Critical Slope	0.026	ft/ft
Velocity	2.87	ft/s
Velocity Head	0.13	ft
Specific Energ	0.67	ft
Froude Numb	0.78	
Flow Type	Subcritical	

P. 1 of 4

COMPUTATION OF WEIR COEFFICIENT. SEE FIGURE 7.

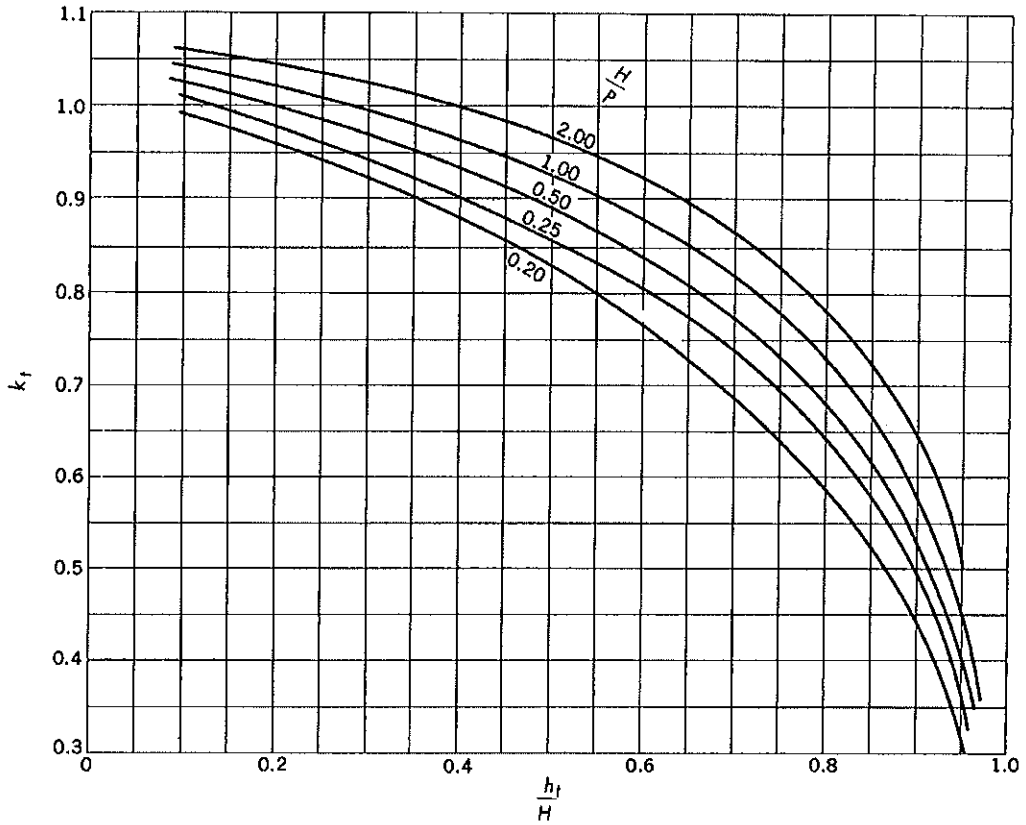

Figure 4.—Definition of adjustment factor, k_t, for submerged sharp-crested rectangular weirs.

Vennard and Weston (1943) used the work of several investigators to define the relationship shown in figure 4. This relationship may be used to compute the discharge over submerged weirs after the discharge for free flow conditions is determined by using the equation and coefficients given in the previous sections.

Broad-Crested Weirs

Definitions

Pertinent features of the geometry and flow pattern for a broad-crested weir are illustrated on figure 5. The weir has a nearly horizontal crest of finite length, L, in the direct of flow. A zone of curvilinear flow occurs near the upstream end of the weir, and separation occurs unless the upstream corner is rounded. If the weir is sufficiently long, the flow may become parallel to the crest.

The term "broad-crested weir" is generally poorly defined; usually, this weir has been classified only with respect to the geometry of the structure itself. Almost universally, a weir is called broad-crested if it has a nearly horizontal crest of finite length in the direction of flow. This definition is not entirely adequate, because at sufficiently high head-to-length ratios the nappe tends to spring clear of the weir crest, and the structure no longer performs as a broad-crested weir. At the opposite extreme, for a very small head-to-length ratio, the weir crest becomes a reach of open channel in which frictional resistance predominates, and for which the discharge is more properly evaluated by one of the open-channel flow formulas than by a weir formula. It is thus clear that any definition of a broad-crested weir must include the head acting on the weir.

The point at which the nappe becomes detached at the upstream crest entrance and

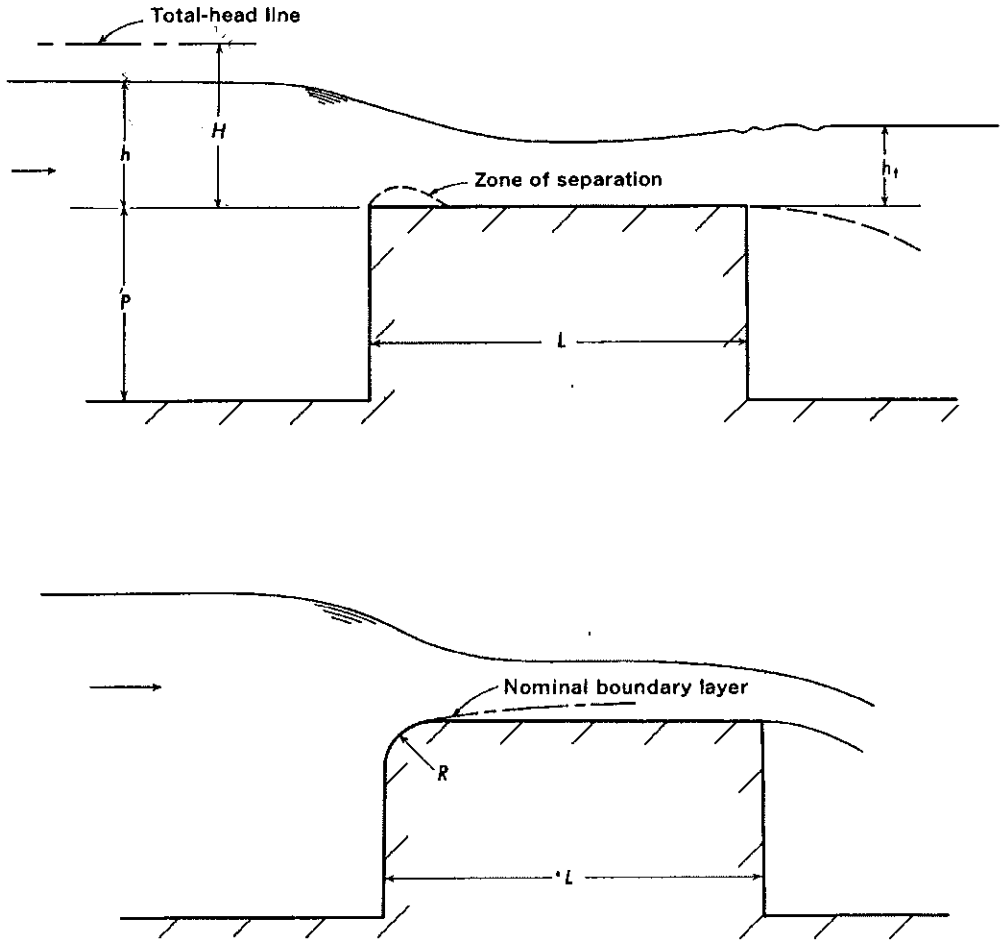

Figure 5.—Definition sketches of broad-crested weirs with vertical faces and horizontal crest.

springs clear of the weir crest varies somewhat, depending upon the completeness of aeration of the space beneath the downstream nappe, the h/P ratio, and the sharpness of the entrance. The tests made by Bazin indicate that it may occur at an h/L as low as 1.5, or as high as 2.3, for aerated weirs.

The minimum h/L ratio for which the lower nappe will clear the downstream corner of a broad-crested weir is shown on figure 6. If the nappe clears the downstream corner, the weir should be treated as a sharp-crested weir; otherwise it is classified as a broad-crested weir, provided the ratio h/L is greater than 0.10. If h/L is less than 0.10, use figure 23.

Basic equation

The discharge equation for broad-crested weirs is more conveniently expressed in terms of the total energy head, H. The discharge equation is:

$$Q = CbH^{3/2}, \tag{3}$$

where

Q = discharge,
C = a coefficient of discharge,
b = width of the weir normal to the flow, excluding width of piers, and
H = total energy head $(h + V_1^2/2g)$ referred to the crest of the weir, and V_1 is the

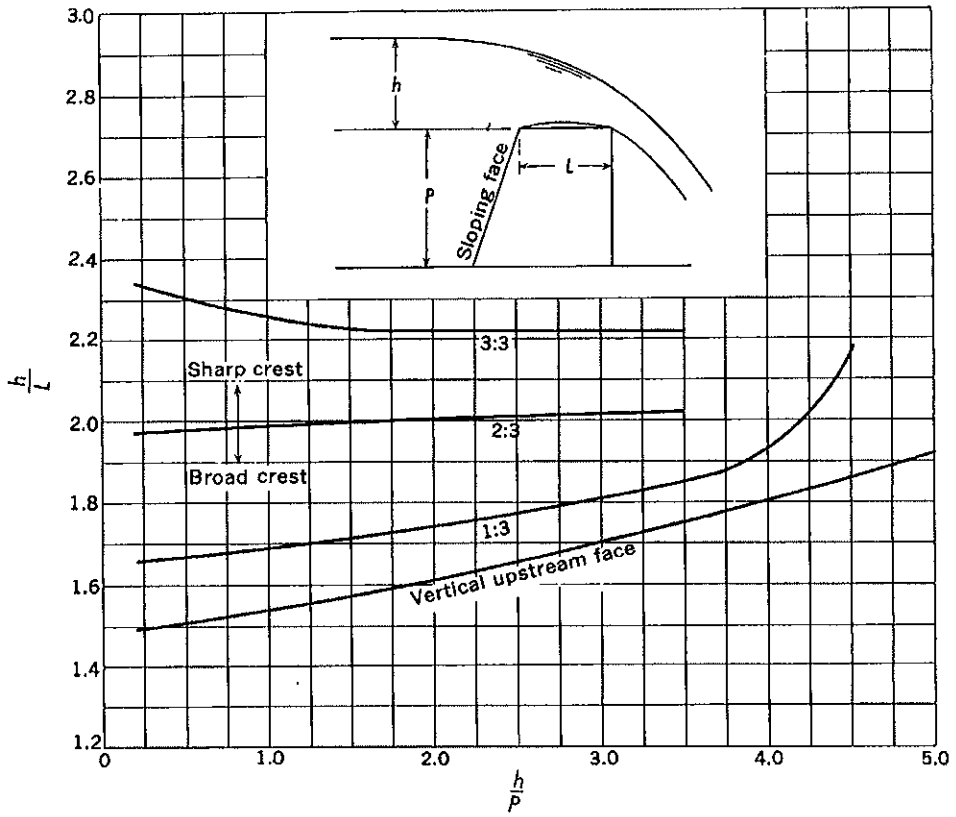

Figure 6.—Minimum h/L ratio for which the lower nappe will clear the downstream corner of a broad-crested weir.

mean velocity at the approach section to the weir.

Discharge coefficients

The discharge coefficient in equation 2 for free discharge over the weir is a function of the following dimensionless ratios,

$$C=f\left(\frac{h}{L}, \frac{R}{h}, E_1, E_2, \frac{b}{B}, \frac{r}{b}\right)$$

where R is the radius of rounding of the upstream vertical face at the entrance, r is the radius of rounding of the side abutment, and E_1 and E_2 are the slope of the upstream and downstream face of the weir. The slope is defined as the ratio of the horizontal to vertical distance.

The relation between C, h/L and E_1 for the condition E_2 equal to or less than 1:1 and b/B equal to 1 is shown on figure 7.

If the slope of the downstream face of the weir is flatter than 1:1, the values of C from figure 7 must be multiplied by a factor, k_s, from the following table:

h/L	Downstream slope			
	2:1	3:1	4:1	5:1
0.1	1.00	1.00	1.00	1.00
.4	1.00	1.00	1.00	1.00
1.0	.98	.96	.95	.94
2.0	.98	.94	.91	.90

If the upstream weir face is vertical and the entrance corner is rounded, the value of C from figure 7 must be multiplied by a factor, k_R from the following table:

$\frac{R}{h}$	k_R	$\frac{R}{h}$	k_R
0	1.00	0.08	1.05
.02	1.01	.10	1.06
.04	1.03	.12	1.08
.06	1.04	≥.14	1.09

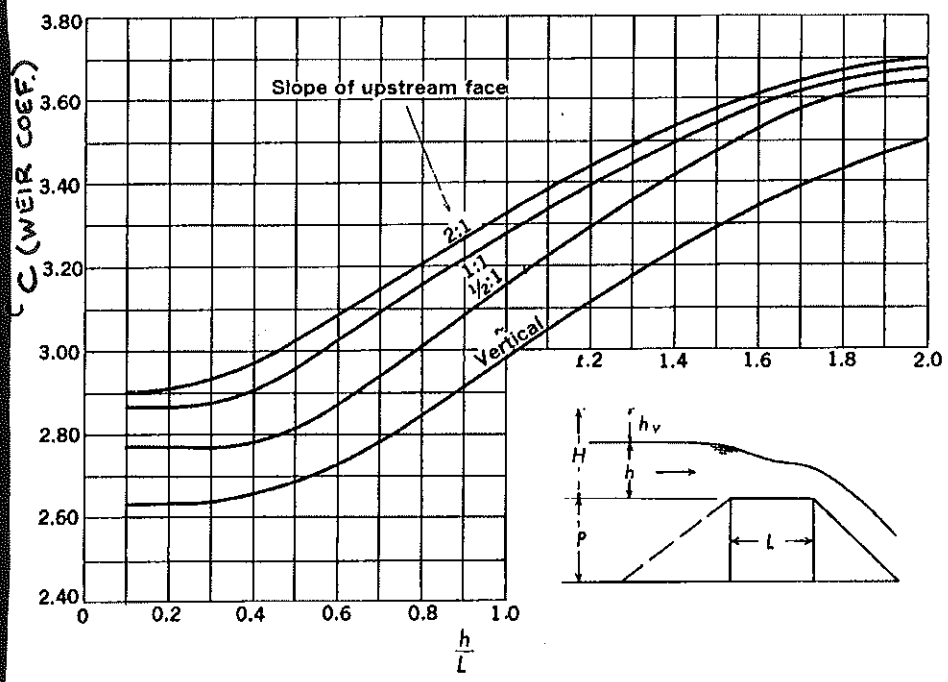

Figure 7.—Coefficients of discharge for full width, broad-crested weirs with downstream slope ≦ 1:1 and various upstream slopes.

Side contractions (abutments) reduce the effective length of the weir crest. This effect is accounted for by multiplying the value of C determined by the procedures given above by a correction factor, k_c. If the abutment corners are square, use the factor obtained from figure 3. If the abutment corners are round and $r/b>0.12$, assume that $k=1.00$. For lesser values of r/b, interpolate between these two values.

Submerged broad-crested weirs

The degree of submergence of a broad-crested weir is defined by the ratio of the downstream static head h_t to the upstream static head, h. Submergence has no effect on the discharge coefficient if the submergence ratio h_t/h is less than 0.85. At larger ratios submergence has an appreciable effect, but test data to quantitatively define the effect are not available.

Round-Crested Weirs

Round-crested weirs are defined as weirs with crests that are smooth single-curved (cylindrical) surfaces. The longitudinal profile of the crest generally is not a circular arc, as the name may imply; often it is a complex curve which cannot be described in simple geometric terms. The crests of overfall spillways of most modern high dams, which have the form of the lower surface of the nappe from a full-width thin-plate weir, are special examples of round-crested weirs. These are commonly called ogee or design-head dams.

The profile geometry of round-crested weirs shows that they are in a class intermediate between thin-plate weirs and broad-crested weirs. The crest is long enough (in the direction of flow) to provide support for the nappe through the control section, but it is short enough that the flow over the crest is markedly curvilinear. The fixed lower boundary of the nappe is therefore subject to much variation in pressure; for any given head the pressure may vary considerably from point to point, and at any given point the pressure varies appreciably with the head.

The geometry and flow pattern for a simple round-crested weir are illustrated on figure 8. The intersection of the curvilinear crest and the vertical (or inclined) face of the weir is

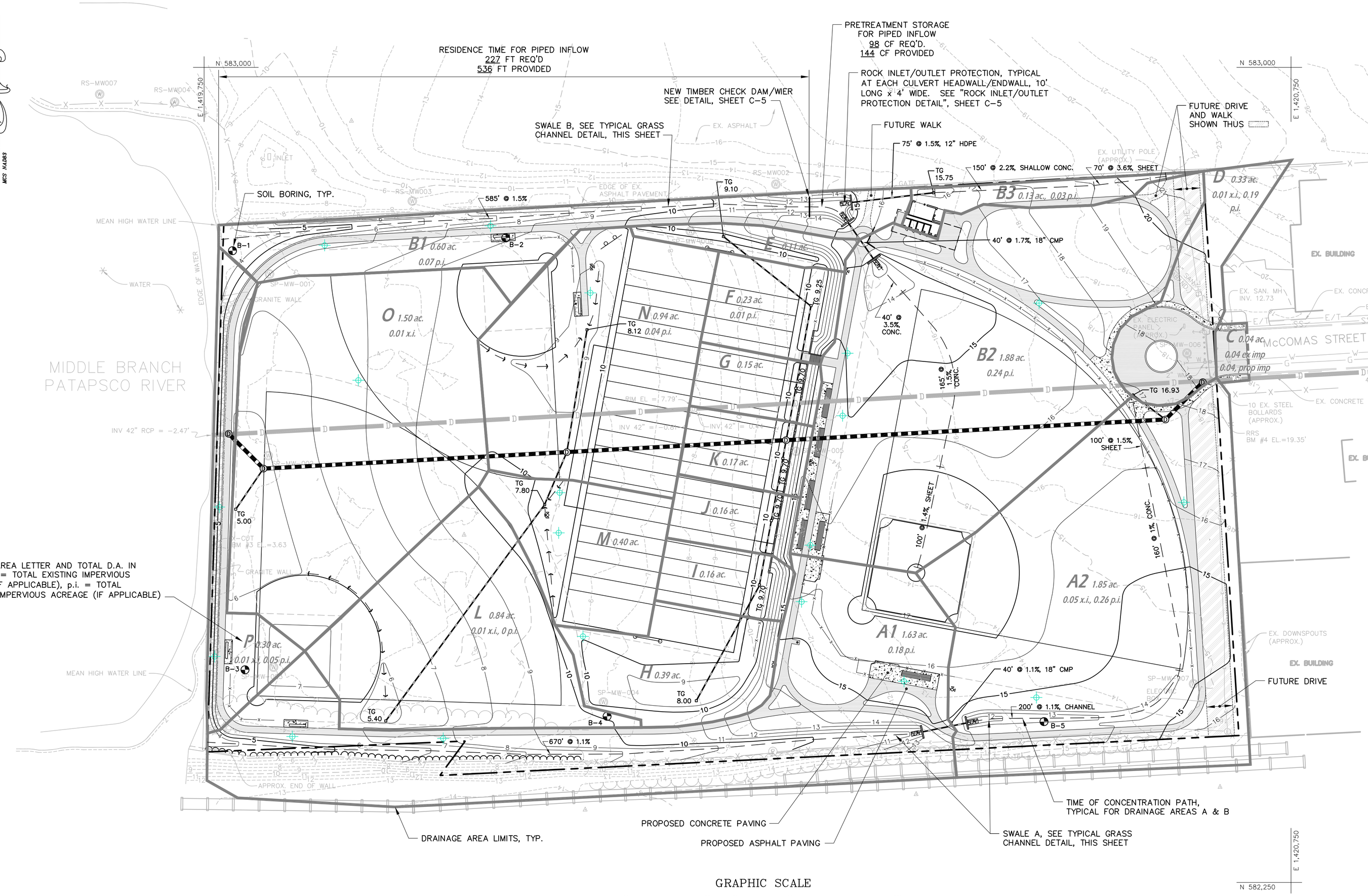

SWM NOTES

1. THIS PROJECT ADDRESSES STORMWATER MANAGEMENT REQUIREMENTS FOR BOTH PROPOSED AND FUTURE SITE IMPROVEMENTS, AS SHOWN ON THE PLAN ABOVE.
2. QUALITY CONTROL: GRASS CHANNELS ARE PROPOSED TO ADDRESS THE STORMWATER QUALITY CONTROL REQUIREMENTS OF DRAINAGE AREAS A AND B. STORMWATER QUALITY CONTROL FOR THE REMAINING DRAINAGE AREAS (C–P) SHALL BE ADDRESSED BY OFFSITE MITIGATION IN THE FORM OF 0.27 ACRES OF IMPERVIOUS AREA REMOVAL. THE EXACT SITE TO BE DETERMINED BY THE DEPARTMENT OF RECREATION AND PARKS.
3. RECHARGE: DUE TO ARSENIC CONTAMINATION AT THIS SITE, A WAIVER OF GROUNDWATER RECHARGE REQUIREMENTS HAS BEEN REQUESTED.
4. QUALITY CONTROL: ALL RUNOFF FROM THIS SITE DIRECTLY DISCHARGES TO TIDAL WATERS. THUS, ALL STORMWATER QUALITY CONTROL REQUIREMENTS ARE WAIVED PER SUBTITLE 23–1 (1) OF THE BALTIMORE CITY MANAGEMENT ORDINANCE.
5. THE GRASS CHANNELS SHOWN ON THIS PLAN HAVE BEEN PRECISELY DESIGNED TO MEET NON–EROSIVE VELOCITY, RESIDENT TIME, PRETREATMENT STORAGE AND CHANNEL DEPTH REQUIREMENTS FOR THE 1–INCH AND THE 10–YEAR STORMS, AS ESTABLISHED IN THE 2000 MARYLAND STORMWATER DESIGN MANUAL. REFER TO THE "SWANN PARK STORMWATER MANAGEMENT CALCULATIONS" REPORT FOR THE CALCULATIONS.
6. SEE ALSO "STORMWATER MANAGEMENT NOTES, DETAILS AND CERTIFICATIONS", SHEET C–5, FOR ADDITIONAL INFORMATION.

GRAPHIC SCALE

50 0 25 50 100 200

(IN FEET)
1 inch = 50 ft.

GROUNDWATER MEASUREMENTS

SOIL BORING	DEPTH	ELEVATION
B1	4'	–1
B2	4'	1
B3	4'	–1
B4	4'	2
B5	4.5'	9

NOTES

ASSUMING GROUNDWATER LEVELS ACROSS THE SITE MIMIC THE LEVELS RECORDED WITH THE ABOVE BORINGS, THE PROPOSED BOTTOM OF SWALES A & B WILL ALWAYS BE AT LEAST 2' ABOVE GROUNDWATER LEVELS.

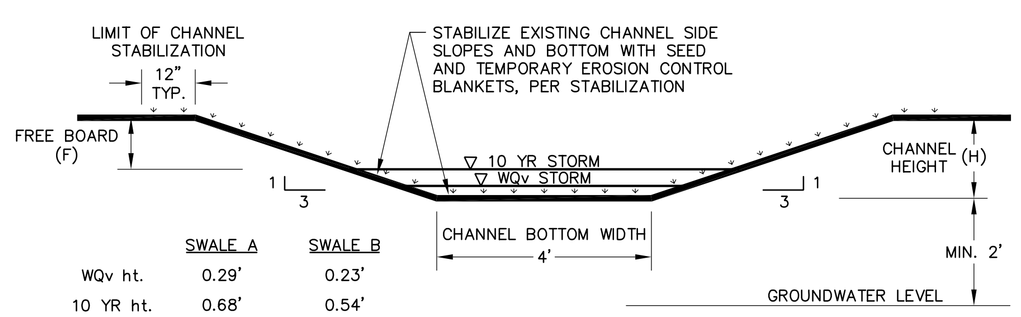

	SWALE A	SWALE B
WQv ht.	0.29'	0.23'
10 YR ht.	0.68'	0.54'
H	MIN. 12"	MIN. 18"
F	MIN. 3.8"	MIN. 11.5"

TYPICAL GRASS CHANNEL DETAIL
NOT TO SCALE

UNIFIED STORMWATER SIZING CRITERIA

DRAINAGE AREA	WATER QUALITY VOLUME (WQv)		GROUNDWATER RECHARGE VOLUME (REv)		CHANNEL PROTECTION VOLUME (CPv)		OVERBANK FLOOD PROTECTION VOLUME (Qp)		EXTREME FLOOD VOLUME (Qf)	
	REQ'D.	PROV.	REQ'D.	PROV.	REQ'D.	PROV.	REQ'D.	PROV.	REQ'D.	PROV.
A	2108 CF	2108 CF GRASS CHANNEL CREDIT	N/A	W_2	N/A	W_1	N/A	W_1	N/A	W_1
B	1581 CF	1581 CF GRASS CHANNEL CREDIT	N/A	W_2	N/A	W_1	N/A	W_1	N/A	W_1
C THRU P	0.27 ACRES	0.27 ACRES OFFSITE [1]	N/A	W_2	N/A	W_1	N/A	W_1	N/A	W_1

NOTES

W_1 – SITE HAS DIRECT DISCHARGE TO TIDAL WATERS, STANDARD WAIVER REQUESTED.

W_2 – WAIVER REQUESTED, SEE SWM NOTES.

1 – OFFSITE MITIGATION PROPOSED, SEE SWM NOTES.

NO.	DATE	REVISION	BY

Rummel, Klepper & Kahl, LLP
Consulting Engineers Since 1923
• Engineers • Scientists • Planners • Construction Managers
81 Mosher Street
Baltimore, Md. 21217
www.rkk.com
Ph: 410.728.2900
Fax: 410.728.3160

I hereby certify that these documents were prepared or approved by me, and that I am a duly licensed professional engineer under the laws of the State of Maryland.
License #XXXX
Expiration Date: XX/XX/XX

STORMWATER MANAGEMENT PLAN

SWANN PARK
201 West McComas Street, Baltimore, Maryland, 21230
Ward 23, Section 10, Block 1049, Lot 1, Zoning M-3
BALTIMORE CITY DEPARTMENT OF RECREATION AND PARKS

PROJECT:	07–076–01
DESIGNED:	raf
DRAWN:	tjs
CHECKED:	X.X.X.
DATE:	JAN. 23, 2008
SCALE:	AS SHOWN
DRAWING:	C-4

Jan 21, 2008 – 11:39am User: tsmith
K:\projects\2007\07076_BCDRP\task01-swann\CADD\Plans\07076C-004-Stormwater.dwg

STABILIZATION SPECIFICATIONS

1. THE GRASS CHANNELS MAY NOT RECEIVE RUNOFF UNTIL THEY HAVE RECEIVED FINAL STABILIZATION. CONTRACTOR SHALL BE RESPONSIBLE FOR TEMPORARILY ROUTING RUNOFF AROUND FACILITY.

2. ALL GRASS CHANNELS SHALL BE STABILIZED BY SEEDING, LIMING, FERTILIZING AND MULCHING IN ACCORDANCE WITH THE 1994 STANDARDS AND SPECIFICATIONS FOR SOIL EROSION AND SEDIMENT CONTROL AND THE FOLLOWING SEEDING SUMMARY.

PERMANENT SEEDING SUMMARY

SEED MIXTURE (FOR HARDINESS ZONE 7A) (FROM TABLE 25)					FERTILIZER RATE (10–20–20)			LIME RATE
NO.	SPECIES	APPLICATION RATE (LB/AC)	SEEDING DATES	SEEDING DEPTHS	N	P205	K20	
8	REED CANARY GRASS (75%)	40	3/1–5/15 8/15–11/15	AS RECOMMENDED BY MANUFACTURER	90 LB/AC (2.0 LB/ 1000 SF)	175 LB/AC (4 LB/ 1000 SF)	175 LB/AC (4 LB/ 1000 SF)	2 TONS/AC (100 LB/ 1000 SF)
	REDTOP (6%)	3						
	BIRDSFOOT TREEFOIL	10						

3. TEMPORARY EROSION CONTROL BLANKETS SHALL BE PROVIDED WHERE SHOWN ON PLANS AND SECTIONS AND SHALL BE "LANDLOK C2" COCONUT (COIR) BLANKET BY SI GEOSOLUTIONS, (800) 621–0444, OR APPROVED EQUAL, BIO–DEGRADABLE. EROSION CONTROL MATTING SHALL BE INSTALLED PER DETAIL 22 OF THE 1994 MD STANDARDS AND SPECIFICATIONS FOR SOIL EROSION AND SEDIMENT CONTROL.

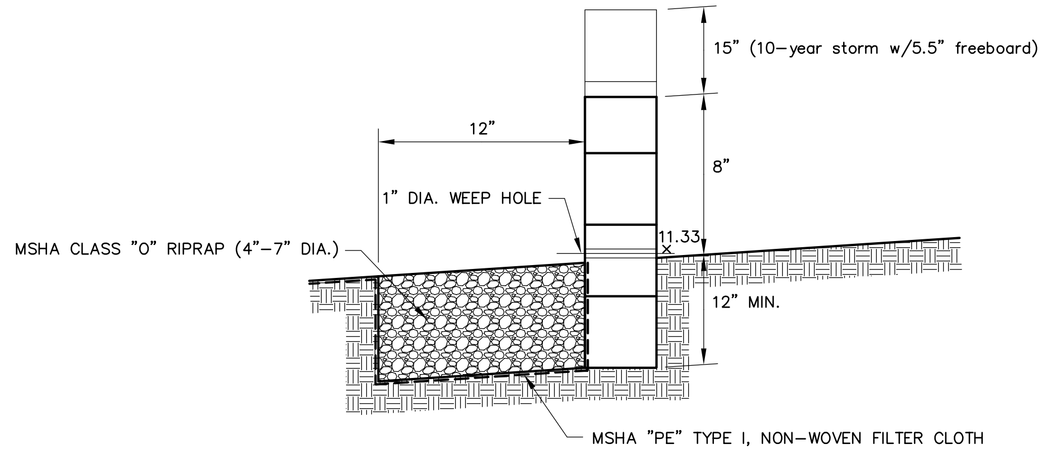

SECTION A–A

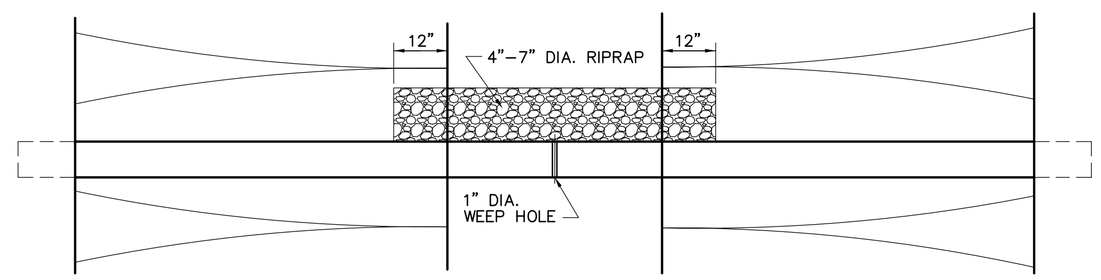

PLAN

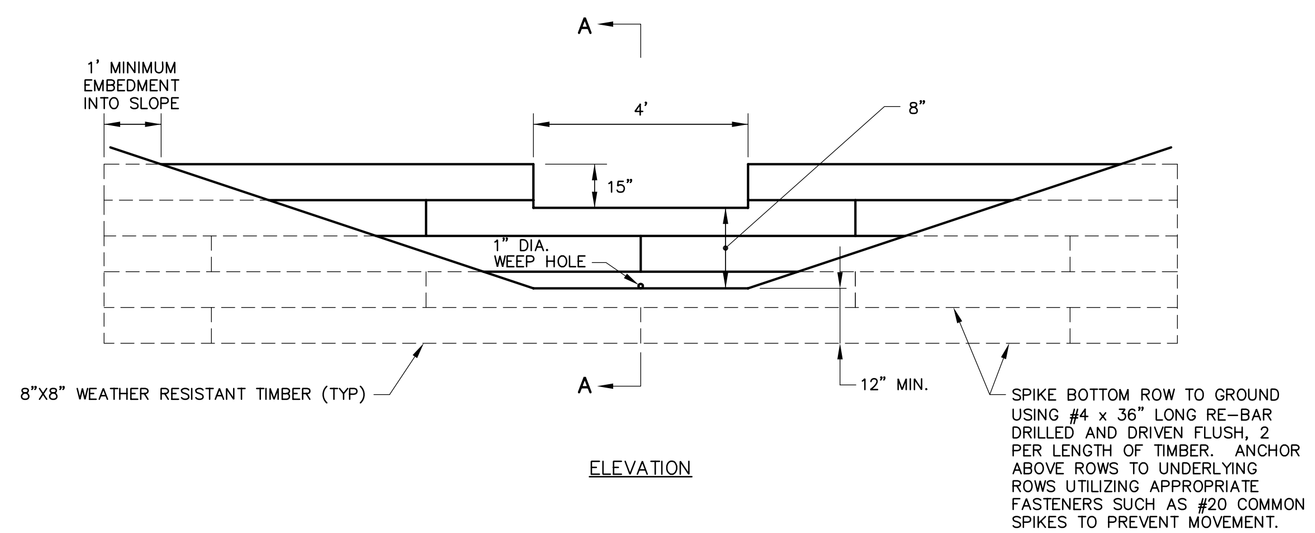

ELEVATION

TIMBER CHECK DAM/WEIR DETAIL

NOT TO SCALE

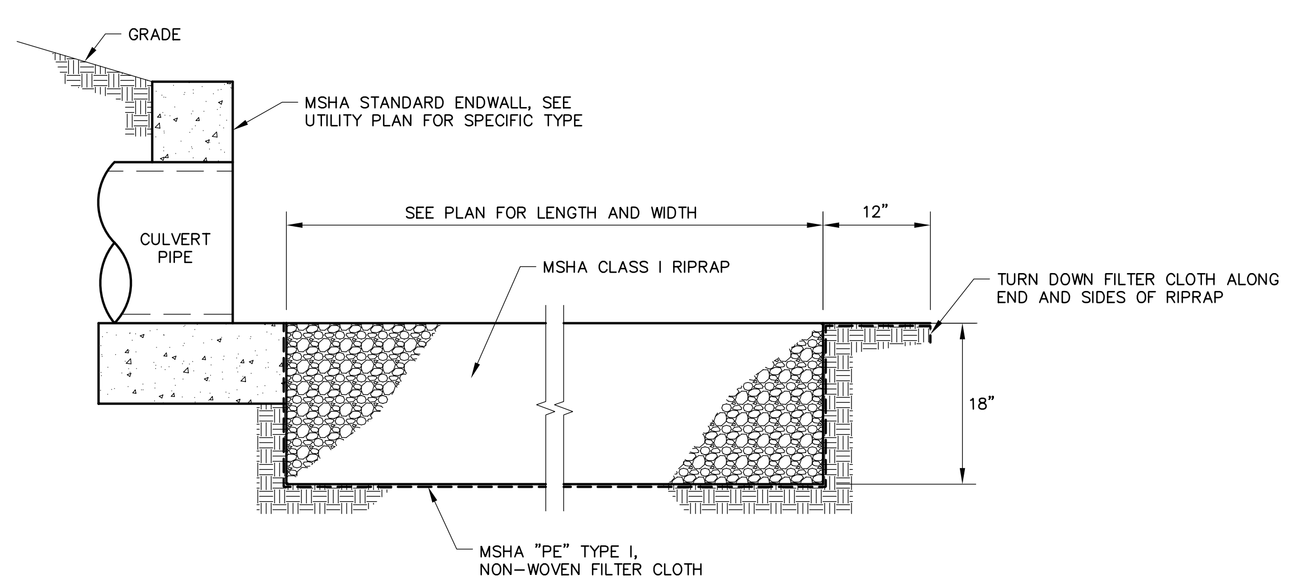

ROCK INLET/OUTLET PROTECTION DETAIL

NOT TO SCALE

ENGINEER'S CERTIFICATION

I DO HEREBY CERTIFY THAT THIS PLAN HAS BEEN PREPARED BY ME OR UNDER MY SUPERVISION AND MEETS THE MINIMUM STANDARDS OF THE BALTIMORE CITY DEPARTMENT OF PUBLIC WORKS REQUIREMENTS AND SPECIFICATIONS.

JOHN d'EPAGNIER	81 MOSHER STREET BALTIMORE, MD 21217	410–462–9333
PRINT NAME	ADDRESS	TELEPHONE NUMBER
SIGNATURE	DATE	LICENSE NUMBER

OWNERS/DEVELOPERS CERTIFICATION

I/WE HEREBY CERTIFY THAT ALL WORK SHOWN ON THESE CONSTRUCTION DRAWINGS AND ON THE APPROVED SEDIMENT CONTROL DRAWINGS WILL BE ACCOMPLISHED PURSUANT TO THESE PLANS. I/WE ALSO UNDERSTAND THAT IT IS MY/OUR RESPONSIBILITY TO HAVE THE CONSTRUCTION SUPERVISED AND CERTIFIED INCLUDING THE SUBMITTAL OF "AS–BUILT" PLANS WITHIN THIRTY (30) DAYS OF COMPLETION, BY A REGISTERED PROFESSIONAL ENGINEER.

BALTIMORE CITY DEPT. OF RECREATION & PARKS C/O GENNADY SCHWARTZ	2600 MADISON AVENUE BALTIMORE, MD 21217	410–396–7948
PRINT NAME	ADDRESS	TELEPHONE NUMBER
SIGNATURE	DATE	LICENSE NUMBER

AS–BUILT CERTIFICATION

I DO HEREBY CERTIFY THAT THE FACILITY SHOWN ON THIS PLAN WAS CONSTRUCTED AS SHOWN ON THE AS–BUILT PLANS AND COMPLIES WITH THE APPROVED PLANS AND SPECIFICATIONS.

PRINT NAME	ADDRESS	TELEPHONE NUMBER
SIGNATURE	DATE	LICENSE NUMBER

MAINTENANCE AND LIABILITY

MAINTENANCE OF THE STORMWATER MANAGEMENT FACILITY AND APPURTENANT DRAINAGE STRUCTURES SHALL BE THE RESPONSIBILITY OF THE PROPERTY OWNER. THE PROPERTY OWNER SHALL ALSO BE FULLY LIABLE FOR ALL DAMAGES OR INJURIES THAT MAY BE SUSTAINED BY ANY PERSON OR PROPERTY AS A RESULT OF ANY FAILURE OR MALFUNCTION OF THE STORMWATER MANAGEMENT FACILITY AND APPURTENANCES.

BALTIMORE CITY DEPT. OF RECREATION & PARKS C/O GENNADY SCHWARTZ	2600 MADISON AVENUE BALTIMORE, MD 21217	410–396–7948
PRINT NAME	ADDRESS	TELEPHONE NUMBER
SIGNATURE	DATE	LICENSE NUMBER

NO.	DATE	REVISION	BY

Rummel, Klepper & Kahl, LLP
Consulting Engineers Since 1923
• Engineers • Scientists • Planners • Construction Managers
81 Mosher Street
Baltimore, Md. 21217
www.rkk.com
Ph: 410.728.2900
Fax: 410.728.3160

I hereby certify that these documents were prepared or approved by me, and that I am a duly licensed professional engineer under the laws of the State of Maryland.
License #XXXX
Expiration Date: XX/XX/XX

STORMWATER MANAGEMENT NOTES, DETAILS AND CERTIFICATIONS

SWANN PARK
201 West McComas Street, Baltimore, Maryland, 21230
Ward 23, Section 10, Block 1049, Lot 1, Zoning M-3
BALTIMORE CITY DEPARTMENT OF RECREATION AND PARKS

PROJECT:	07–076–01
DESIGNED:	raf
DRAWN:	tjs
CHECKED:	X.X.X.
DATE:	JAN. 23, 2008
SCALE:	AS SHOWN
DRAWING:	C-5

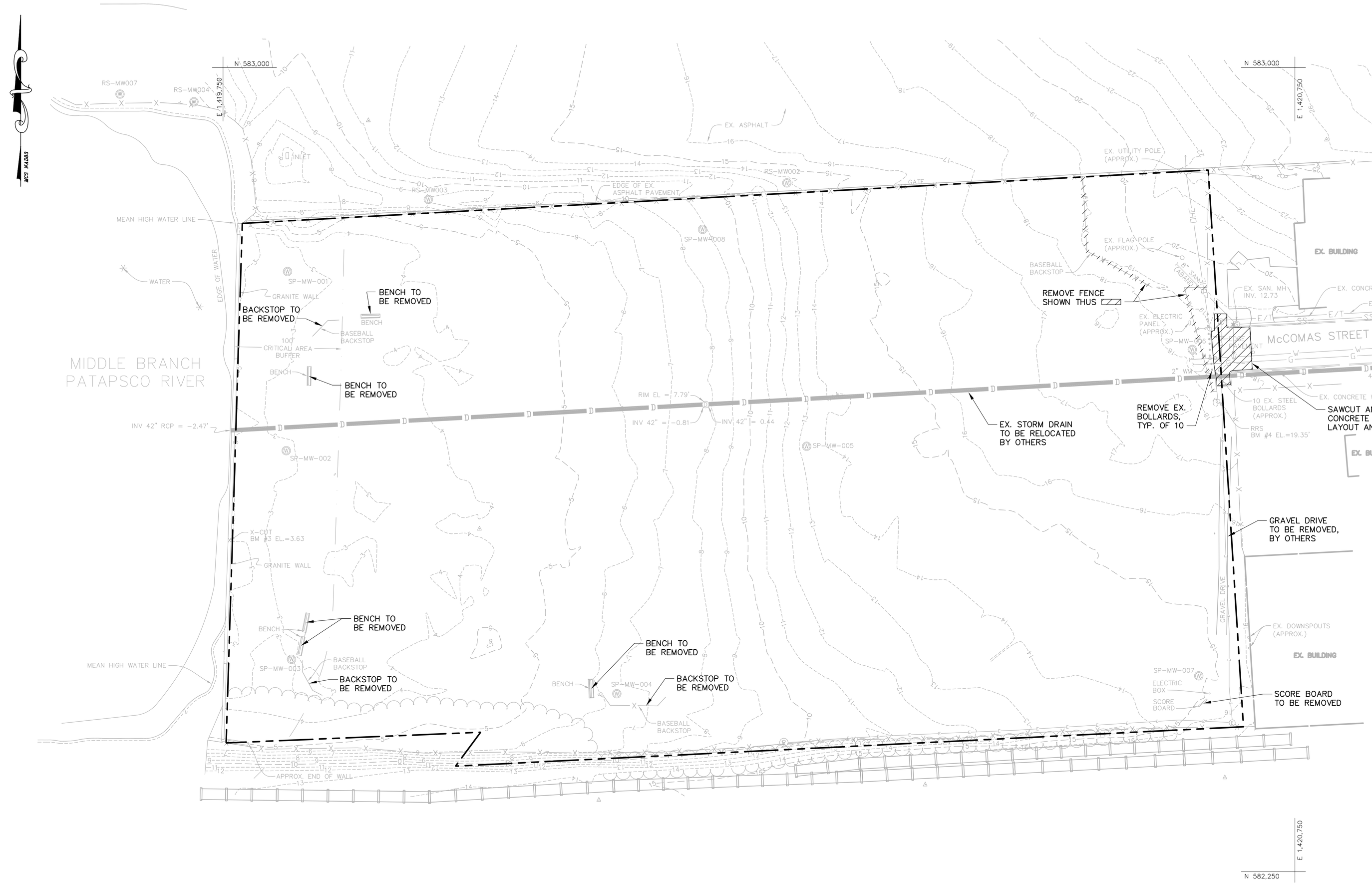

LEGEND

- ELECTRIC MANHOLE
- WATER VALVE
- SANITARY MANHOLE
- STORM DRAIN MANHOLE
- MDE MONITORING WELL
- GAS VALVE
- PROPERTY LINE
- UNDERGROUND GAS
- UNDERGROUND ELECTRIC
- FENCE LINE
- STATE HIGHWAY ADMIN. MANHOLE
- RAILROAD TRACKS
- FIRE HYDRANT
- UTILITY POLE
- BM BENCH MARK
- RRS RAILROAD SPIKE
- WM WATER METER

GRAPHIC SCALE

50 0 25 50 100 200

(IN FEET)
1 inch = 50 ft.

NO.	DATE	REVISION	BY

Rummel, Klepper & Kahl, LLP
Consulting Engineers Since 1923
• Engineers
• Scientists
• Planners
• Construction Managers
81 Mosher Street
Baltimore, Md. 21217
www.rkk.com
Ph: 410.728.2900
Fax: 410.728.3160

I hereby certify that these documents were prepared or approved by me, and that I am a duly licensed professional engineer under the laws of the State of Maryland.
License #XXXX
Expiration Date: XX/XX/XX

EXISTING CONDITIONS AND DEMOLITION PLAN

SWANN PARK

201 West McComas Street, Baltimore, Maryland, 21230
Ward 23, Section 10, Block 1049, Lot 1, Zoning M-3
BALTIMORE CITY DEPARTMENT OF RECREATION AND PARKS

PROJECT:	07-076-01
DESIGNED:	raf
DRAWN:	tjs
CHECKED:	X.X.X.
DATE:	JAN. 23, 2008
SCALE:	AS SHOWN
DRAWING:	

C-1

Jan 21, 2008 - 11:37am User: tsmith

K:\projects\2007\07076_BCDRP\task01-swann\CADD\Plans\07076C-001-Demo.dwg